Airsoftrifle, GNB, Tactical Sniper - 14834

NO	NAME OF PART
1	OUTER BARREL PART A
2	OUTER BARREL PART B
3	FRONT SIGHT
4	INNER BARREL
5	REAR SIGHT PART A
6	REAR SIGHT PART B
7	REAR SIGHT PART C
8	REAR SIGHT PIN
9	REAR SIGHT SCREW A
10	REAR SIGHT SPRING A
11	REAR SIGHT SCREW B
12	REAR SIGHT SPRING B
13	FRONT SIGHT PIN
14	RECEIVER
15	FRAME
16	BOLT
17	CAM SPRING
18	BARREL BUFFER
19	BUFFER SPRING
20	CHAMBER
21	ADJUST RUBBER
22	BARREL LOCK WASHER
23	ADJUST SCREW
24	RECEIVER BASE
25	BULLET STOP
26	BULLET STOP SPRING
27	BULLET STOP PIN
28	FRONT LOCK
29	CAM
30	FRONT LOCK PIN
31	TRIGGER
32	TRIGGER SPRING
33	TRIGGER PIVOT
34	DISCONNECTOR
35	HAMMER
36	HAMMER STURT
37	HAMMER STURT PIN
38	FIRING PIN
39	SAFETY
40	SAFETY HOOK

NO	NAME OF PART
41	MAINSPRING HOUSING
42	BOLT STOP PIN
43	BOLT STOP RETAINING PIN
44	MAINSPRING PLUNGER
45	MAINSPRING
46	MAINSPRING DETENT
47	HOUSING LATCH
48	MAGAZINE LATCH
49	MAGAZINE LATCH SPRING
50	MAGAZINE LATCH PIN
51	GRIP PLATE L
52	GRIP PLATE R
53	GRIP PLATE SCREW
54	MAGAZINE CASE
55	VALVE CATCH
56	MAGAZINE BASE
57	GAS VALVE
58	VALVE ORING A
59	VALVE ORING B
60	VALVE SPRING
61	VALVE CATCH ORING
62	VALVE CATCH ORING
63	VALVE CATCH SCREW
64	VALVE CATCH PIN
65	FOLLOWER
66	FOLLOWER SPRING
67	JOINT PACKING
68	FILLING VALVE
69	GUIDE PACKING
70	MAGAZINE COLLAR
71	BARREL SCREW

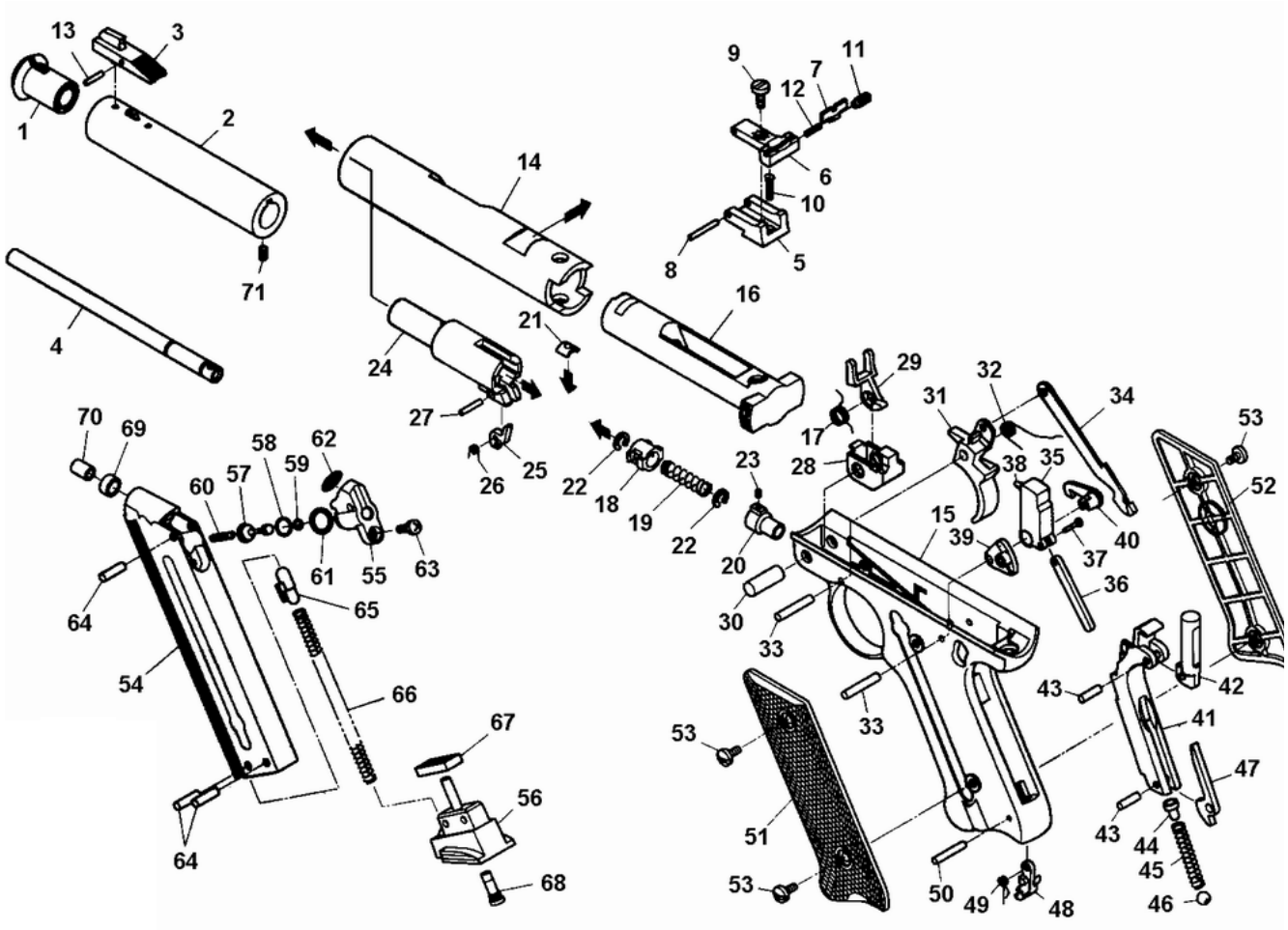

www.univairsoft.com

ActionSportGames ® A/S
Bakkegaardsvej 304
DK-3050 Humlebaek
Denmark
Phone: +45 8928 1888
Fax: +45 4919 3160
www.actionsportgames.com

Airsoftrifle, GNB, Tactical Sniper - 14834

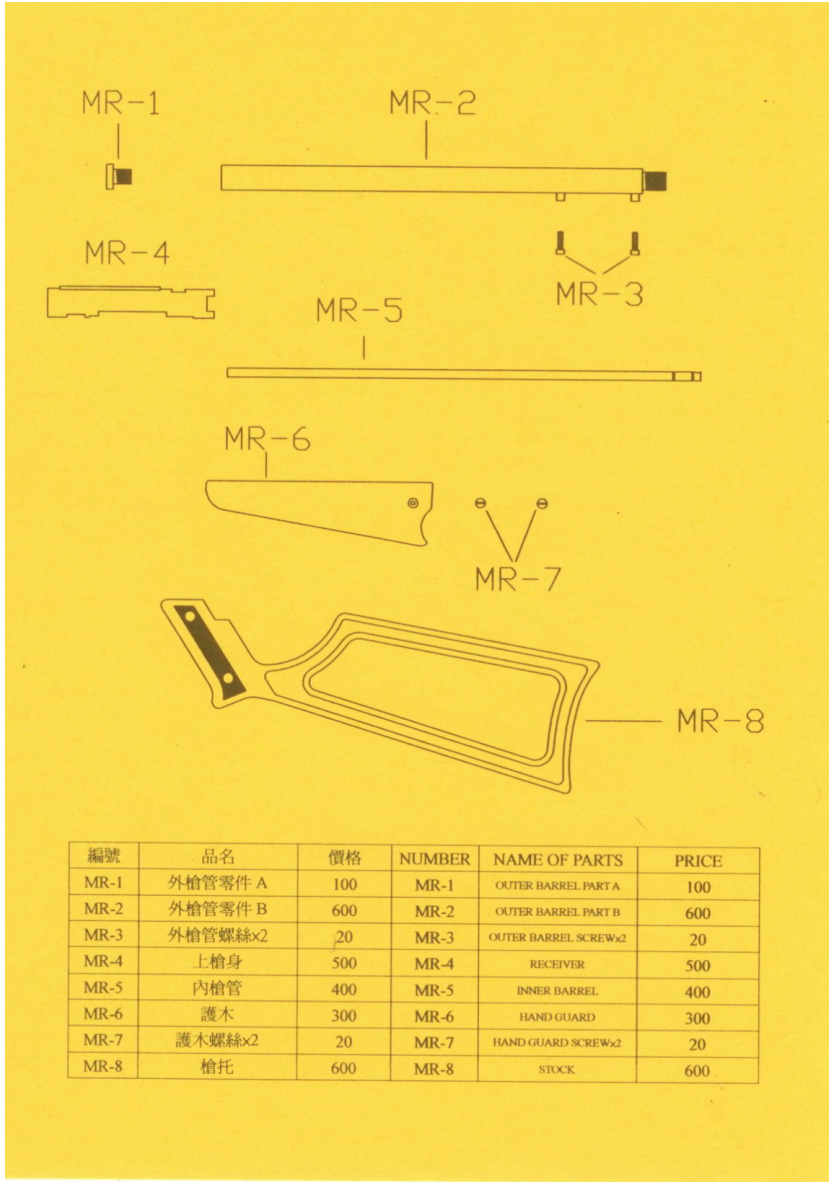

編號	品名	價格	NUMBER	NAME OF PARTS	PRICE
MR-1	外槍管零件 A	100	MR-1	OUTER BARREL PART A	100
MR-2	外槍管零件 B	600	MR-2	OUTER BARREL PART B	600
MR-3	外槍管螺絲x2	20	MR-3	OUTER BARREL SCREWx2	20
MR-4	上槍身	500	MR-4	RECEIVER	500
MR-5	內槍管	400	MR-5	INNER BARREL	400
MR-6	護木	300	MR-6	HAND GUARD	300
MR-7	護木螺絲x2	20	MR-7	HAND GUARD SCREWx2	20
MR-8	槍托	600	MR-8	STOCK	600

UNIVAIRSOFT
www.univairsoft.com

ActionSportGames ® A/S
Bakkegaardsvej 304
DK-3050 Humlebaek
Denmark
Phone: +45 8928 1888
Fax: +45 4919 3160
www.actionsportgames.com