STI TACTICAL X - 17399

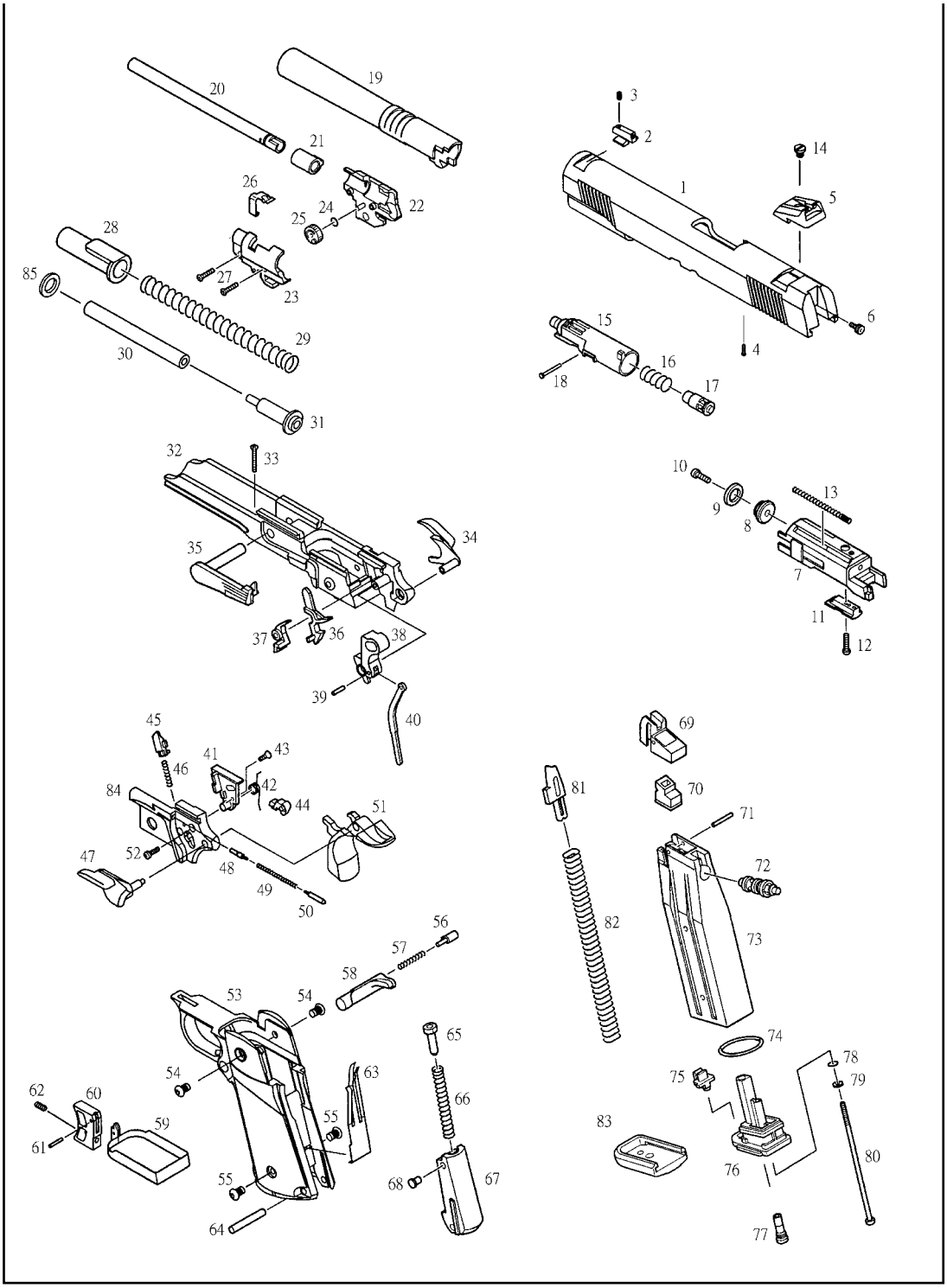

ActionSportGames A/S

Bakkegaardsvej 304
DK-3050 Humlebaek
Denmark

Phone: +45 8928 1888
Fax: +45 4919 3160
www.actionsportgames.com

No.	Name of Part
1	Slide
2	Front Sight
3	Front Sight Screw
4	Cylinder Screw
5	Rear Sight
6	Firing Pin Stop Screw
7	Piston
8	Ring Head
9	Ring
10	Ring Head Screw
11	Piston Part
12	Piston Part Screw
13	Cylinder Return Spring
14	Rear Sight Screw
15	Cylinder
16	Cylinder Valve Spring
17	Cylinder Valve
18	Cylinder Valve Stopper
19	Outter Barrel
20	Inner Barrel
21	Rubber Chamber
22	Chamber Cover (Right)
23	Chamber Cover (Left)
24	O-Ring
25	Adjust Dial
26	Adjust Lever
27	Chamber Cover Screw
28	Recoil Plug
29	Recoil Spring
30	Recoil Spring Guide A
31	Recoil Spring Guide B
32	Chassis
33	Chassis Screw
34	Safety (Right)
35	Slide Stop
36	Disconnector
37	Sear
38	Hammer
39	Hammer Pin
40	Hammer Strut
41	Chassis Cover Part
42	Knocker Spring
43	Chassis Cover Part Screw
44	Knocker
45	Knocker Lock
46	Knocker Lock Spring

No.	Name of Part
47	Safety (Left)
48	Slide Stop Plunger
49	Slide Stop Plunger Spring
50	Safety Plunger
51	Grip Safety
52	Chassis Cover Screw
53	Grip
54	Grip Screw A
55	Grip Screw B
56	Magazine Catch Lock
57	Magazine Catch Spring
58	Magazine Catch
59	Trigger Bar
60	Trigger
61	Trigger Pin
62	Trigger adjust Screw
63	Sear Spring
64	Housing Pin
65	Hammer Spring Plunger
66	Hammer Spring
67	Hammer Spring Housing
68	Plunger Stopper
69	BB Lip Pin
70	Magazine Gasket
71	BB Lip Pin
72	Valve
73	Magazine Case
74	O-Ring
75	Magazine spring Retainer
76	Magazine Base
77	Filling Valve
78	O-Ring
79	Washer
80	Magazine Base Screw
81	Follower
82	Follower Spring
83	Magazine Bottom
84	Chassis Cover
85	Recoil Spring Guide Buffer

www.airsoftunivers.com

ActionSportGames A/S
Bakkegaardsvej 304
DK-3050 Humlebaek
Denmark
Phone: +45 8928 1888
Fax: +45 4919 3160
www.actionsportgames.com